E6582171

TOSHIBA

TOSVERT VF-AS3

Resolver option Instruction Manual

TOSHIBA INDUSTRIAL PRODUCTS AND SYSTEMS CORPORATION

NOTICE

1. Make sure that this instruction manual is delivered to the end user of Resolver option.
2. Read this manual before installing or operating the option. Keep it in a safe place for reference.
3. All information contained in this manual will be changed without notice.

Safety precautions

The items described on the inverter, the resolver option and their instruction manuals are very important so that you can use safely the inverter and resolver option, prevent injury to yourself and other people around you as well as to prevent damage to properly in the area.
Read the instruction manual (E6582062) attached to the inverter to understand the safety precautions, thoroughly familiarize yourself with the symbols and the indications completely and then continue to read the manual. Make sure that you observe all warnings given.

Explanation of markings

Marking	Meaning of marking
WARNING	Indicates that errors in operation will lead to death or serious injury.
CAUTION	Indicates that errors in operation will lead to injury*1 to people or that these errors will cause damage to physical property*2.

*1 Such things as injury, burns or electric shock that will not require hospitalization or long periods of outpatient treatment.
*2 Physical property damage refers to wide-ranging damage to assets and materials.

Meanings of symbols

Marking	Meaning of marking
	Indicates an inhibition (Don't do it). Detailed information on the inhibition is described in illustration and text in or near the symbol.
	Indicates a mandatory action that must be followed. Detailed information on the mandatory action is described in illustration and text in or near the symbol.
	Indicates a warning or caution. Detailed information on the warning or caution is described in illustration and text in or near the symbol.

■ Limitation of use

⚠ WARNING

Prohibited	• Never use the option with any device other than applicable TOSVERT series inverters. This will result in accident.

■ Handling in general

⚠ WARNING

Disassembly inhibited	• Never disassemble, modify or repair the option. This can result in electric shock, fire or other injury. Please call your Toshiba distributor for repairs.
Prohibited	• Do not place or insert any kind of objects (electrical wire cuttings, rods, wires etc.) inside the option. This can result in damage or fire. • Do not allow water or any other fluids come in contact with the option. This can result in damage or fire.
Mandatory action	• Immediately turn the power off the inverter with the option begin to emit to smoke, an unusual odor, unusual sounds or blind display. Continuous use of the inverter and the option in such state will cause fire. If the inverter and the option are left to be turned on in that state, it can cause fire. Please call your Toshiba distributor for repairs.

⚠ CAUTION

Prohibited	• Do not apply shock (falling, etc.) on the option. This can result in damage or malfunction. • Do not touch the connector to the inverter (refer to the outline drawing). This can result in damage or accident.
Mandatory action	• Operate under the environmental conditions prescribed in this manual. Operations under any other condition can result in malfunction.

■ Installation & Wiring

⚠ WARNING

Prohibited	• Do not install and operate the option if it is damaged or any of its component is missing. This will result in fire or accident. Please call your Toshiba distributor for repairs.
Mandatory action	• The following steps must be performed before wiring and installation. Turn off all input power, wait at least 15 minutes, and confirm that the charge lamp of the inverter is no longer lit. If steps above are not properly performed, this will result in electric shock. • Use an emergency stop device and an additional safety device in your system to prevent serious accident due to the option malfunctions. Usage without any emergency stop device or any additional safety device can result in accident or injury.

⚠ CAUTION

Prohibited	• Do not touch the metal part of the power circuit terminals when connecting the interconnection cable to the option. This can result in injury. • Do not connect any wire other than applicable wire to the option. This can result in malfunction or accident. • Do not pull the cable and the connector connected to the option. This can result in damage or malfunction.
Mandatory action	• Use the resolver according to the specification described in this manual. Improper resolver usage can result in accident and malfunction. • Use Multi-layer shielded cable and connect the shield to housing of D-subminiature connector (for option side cable end shield) and housing of resolver (for resolver side cable end shield). Use of unshielded cable or improper shield grounding can result in malfunction or accident.

■ Operation

⚠ CAUTION

Prohibited	• Do not unplug the option from inverter under operation. This will result in the damage or accident.
Mandatory action	• Confirm the rotational direction of motor before start driving your system with this option. Mismatch rotational direction of motor and that indicated by resolver signal will cause malfunction or accident. • Set the correct parameter in accordance with your resolver. The wrong setting between this option and the resolver can result in damage or accident.

■ Disposal

⚠ CAUTION

Mandatory action	• If you dispose of this option, have it done by a specialist in industry waste disposal[*1]. If you dispose of this option by yourself, this can result in production of noxious gases, resulting in injury.

*1 Persons who specialize in the processing of waste and known as “industrial waste product collectors and transporters” or “industrial waste disposal persons”. Please observe any applicable law, regulation, rule or ordinance for industrial waste disposal.

Introduction

Thank you for purchasing the Resolver option for TOSVERT VF-AS3 series inverter. This option is applicable as an interface for resolver.
This manual contains instructions of this option.

⚠ CAUTION

Mandatory action

- Use the resolver with the specification described in this manual.
  Improper resolver usage can result in accident and malfunction.

<Description of the Encoder option>

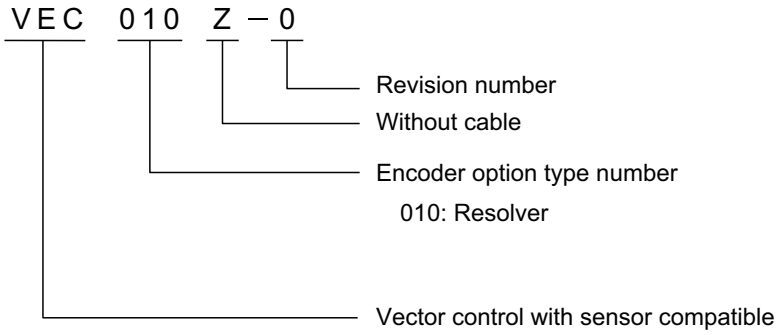

Important

Firmware compatibility

- VF-AS3 of software version “V106” or successor is applicable for this option.
  Refer to inverter instruction manual for the check method of the software version.

- Table of contents -

1. Names of the Parts

External views of the Resolver option are described in this section together with the names of parts.

■ External views and names of parts on the option

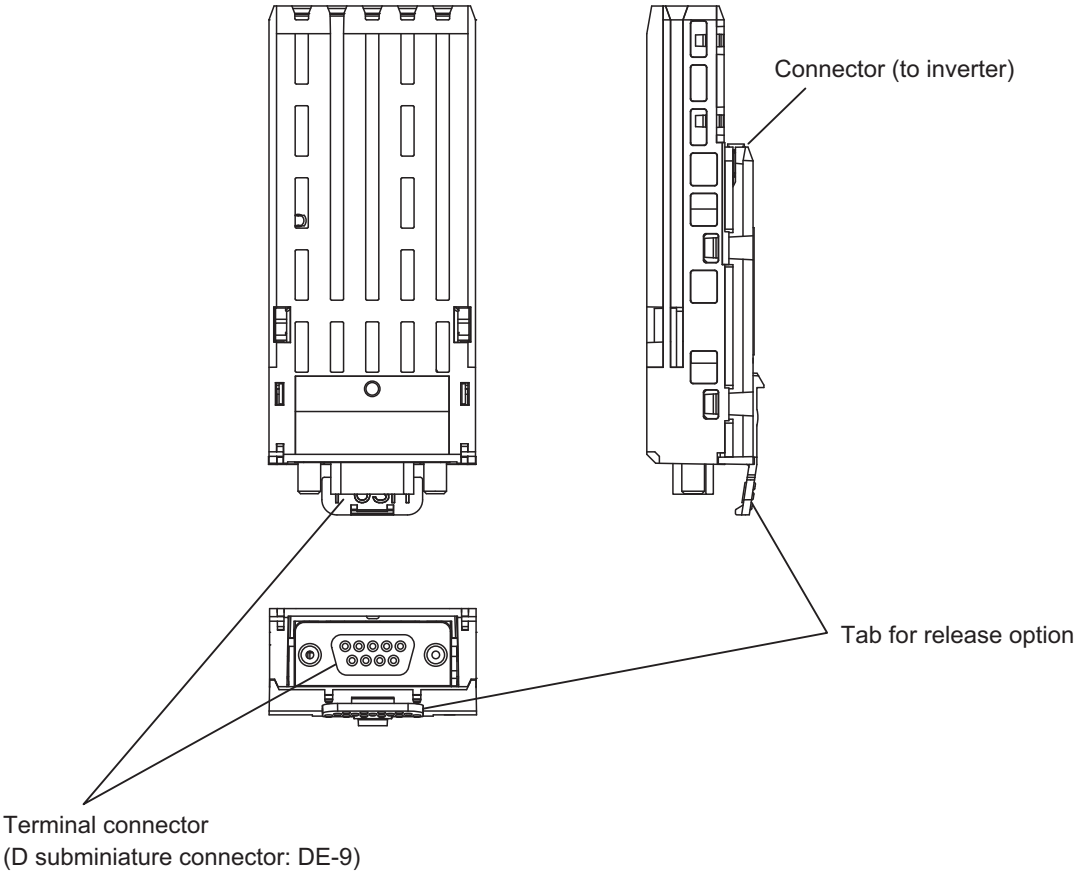

2. Installation and wiring

Install the Resolver option to the inverter according to the procedures below.

2.1 Installation to the Inverter

■ Mounting

1)

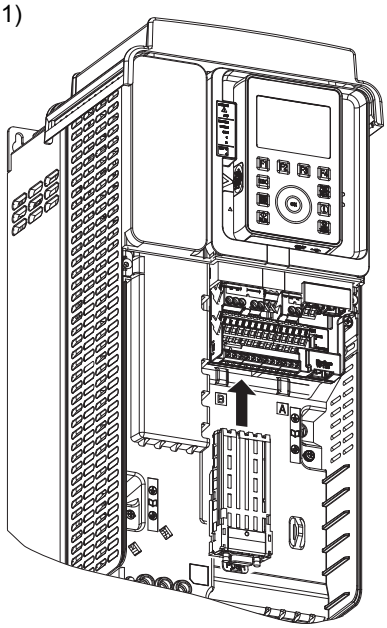

Insert the option into the slot B.
Keep the option from hitting other parts near slot.

2)

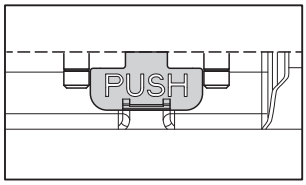

The option should be inserted until the body is totally covered by the slot. (Refer to the picture above)

■ Removing

1)

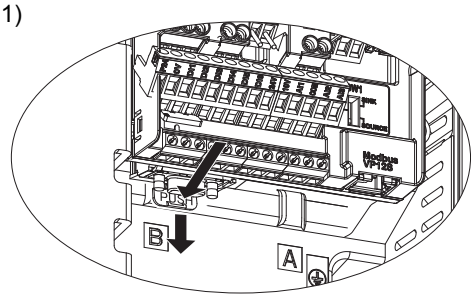

Remove the option in the direction of arrow while pushing the "PUSH" tab by a screw driver.

2.2 Wiring

2.2.1 Signaling

Following type resolver is applicable for this option.
- Excitation frequency: 3 to 12 kHz
- Transformation ratio: 0.5

Recommended resolver is RTD4A4Y2 P1 7 10 0.5 D2SR12 12 (Baumer).

⚠ Caution

Mandatory action

- Use the resolver with the specification described in this manual.
  Improper resolver usage can result in accident and malfunction.

As for the resolver signals, connect S1-S4 and R1, R2 with the same terminal on your resolver.
The signal feedback from the resolver should have the waveform shown in Fig.1 (S2-S4 should have 90degree phase difference from S3-S1) in terms of the motor rotation direction. The resolver installation direction and signal wiring should be done accordingly.

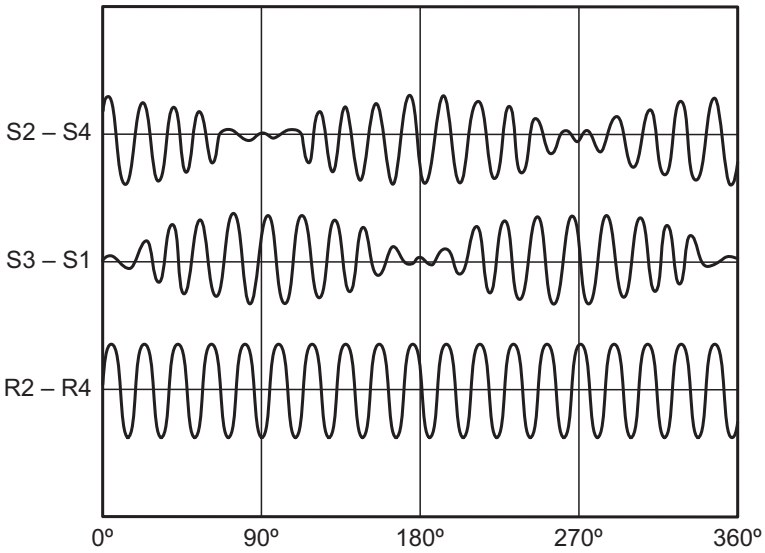

Fig.1 - Resolver format signal

Important

- Forward rotation or reverse rotation is judged from the resolver feedback signals of S2-S4 and S3-S1. Therefore, it should be noted that, when connections are wrong, there is possibility for abnormal rotation of the motor.

2.2.2 Interface Connector

9pin D subminiature connector (DE-9) is prepared in this option. Pin numbers of connector are shown the figure in below. Prepare the same type male connector separately for the cable end of interconnection cable.

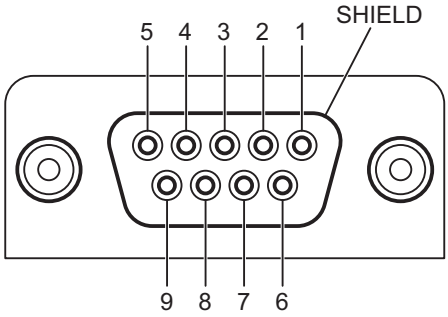

Fig.2 - Resolver interface connector (D subminiature)

2.2.3 Pin assignment

Table 2-1. Pin assignment

No.	Symbol	Input/output	Function / Electrical specifications	Internal circuit
1	-	-	(NC)	-
2	-	-	(don’t use)	-
3	S4	Input	Sinusoidal signal from resolver (–), pair with S2 signal	Refer to (a)
4	S1	Input	Sinusoidal signal from resolver (+), pair with S3 signal	Refer to (a)
5	R2	Output	Excitation voltage (+) Carrier frequency 3 to 12kHz	Refer to (b)
6	-	-	(don’t use)	-
7	S2	Input	Sinusoidal signal from resolver (+), pair with S4 signal	Refer to (a)
8	S3	Input	Sinusoidal signal from resolver (–), pair with S1 signal	Refer to (a)
9	R1	Output	Excitation voltage (–) Carrier frequency 3 to 12kHz	Refer to (b)
Housing	Shield	-	Cable shield (metal housing of connector) This part is connected to PE terminal inside the inverter	-

Table 2-2. Internal circuit

	Circuit diagram
(a)	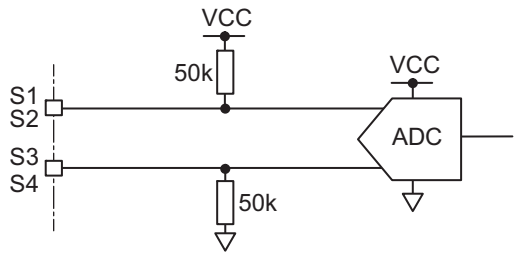
(b)	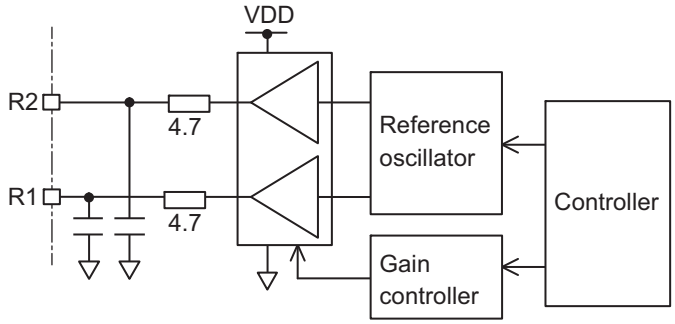

2.2.4 Wiring with resolver

When wiring, follow the instructions below.

- Use multi-layer shielded cable
- Use twisted pair for S1/S3, S2/S4 and R1/R2 each
- For R1/R2 pins, parameter set-up according to your resolver is also needed (See 3.1.1)
- Do not connect any wire to unused pins
- Recommended wire size is 0.25 mm^2 (AWG23) for signal line (S1,S2,S3,S4), 0.5 mm^2 (AWG20) for excitation voltage (R1 and R2)
- The cable length is 100 m at maximum.

Important

- Separate the interconnection cable between your resolver and this option 20cm or more away from power (Power supply and motor) cable to prevent from the signal disruption by noise immunity.

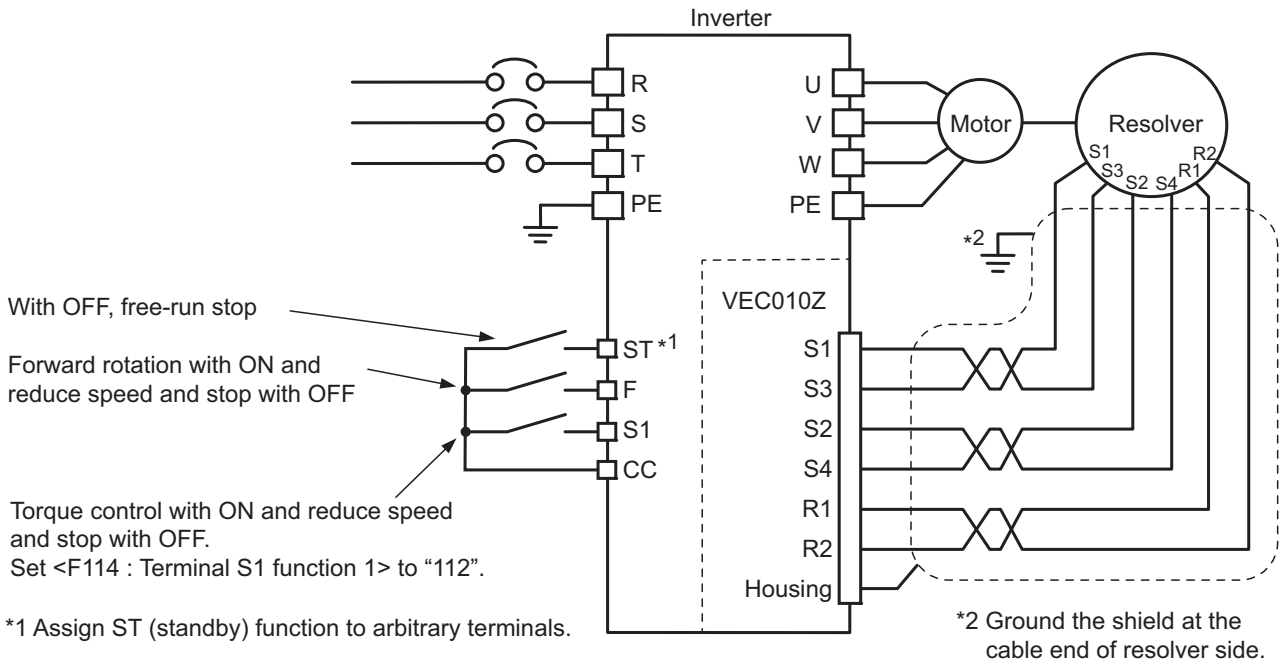

Fig.3 - Example of wiring for Resolver (Speed/Torque switching operation)

Important

- When prohibition on reverse rotation is set by the inverter parameter <F311: Reverse inhibited> = “1” and when the motor is rotating to reverse direction due to an external force, the inverter starts with reverse operation in accordance with the motor's rotation direction for a time and the motor will be able to shift to the forward rotation and the smooth startup becomes possible.

3. Functional Description

3.1 Performance of vector control with resolver

Using the sinusoidal wave feedback signal from the resolver installed on the motor shaft or load rotation shaft, vector control with sensor can be conducted.

Speed control operation: 0 speed to 150% torque,
speed control range: 1:1000
speed accuracy: ±0.02% (50Hz base digital input)
Torque control operation: Torque control accuracy: ±10%
(torque control range: -100% to 100%)

3.1.1 Parameter setting for vector control with resolver

During operation with vector control with sensor, it would be necessary to set the following parameters shown below.

■ **Set V/f pattern**

Table 3-1. parameter of control pattern

Title	Function Name	Parameter Setting	Default Setting
Pt	V/f Pattern	0: V/f constant 1: Variable torque 2: Automatic torque boost 3: Vector control 1 4: Energy savings 5: Dynamic energy savings (for fan and pump) 6: PM motor control 7: V/f 5-point setting 8: - 9: Vector control 2 (speed / torque) 10: PG feedback control 11: PG feedback vector control (speed / torque) 12: PG feedback PM motor control (speed / torque)	0

When conducting vector control with sensor (speed/torque control) with this board option, <Pt> = “10”, “11”, “12” should be set.
For torque control operation, it is necessary to allocate control switching (torque/position) to one of the terminal function selection <F111> to <F118> (input terminal function selection 1 to 8) (when <CMOd> =“0”) or to allocate to communication control switching (when <CMOd> =“2” to “5”), in addition to the above parameters.
For details of adjustment methods by the speed control command and torque control command, refer to the Function manual for torque control (E6582106).

■ Set parameters of resolver

Table 3-2. Parameters of resolver

Title	Function Name	Parameter Setting	Default Setting
F376	PG select	0: PTI (Command) – PTI (FB) 1: PTI (Command) – Digital option (FB) 2: - 3: PTI (Command) - Resolver option (FB) 4 - 5: - 6: Digital option (Command) - Non FB 7 - 9: - 10: PTI (Command) - PTI (FB inversion) 11: PTI (Command) - Digital option (FB inversion) 12: - 13: PTI (Command) - Resolver option (FB inversion) 14 - 15: - 16: Digital option (Command inversion) - Non FB	0
F377	PG option disconnection detection	0: Disabled 1: Enabled	0
F397	Resolver carrier frequency	3 - 12	10

(1) <F397: Resolver carrier frequency> is the excitation carrier frequency of resolver signal.
(2) Set <F376: PG select> to “3” when polarity is positive, or “13” when polarity is negative.
(3) <F377: PG option disconnection detection>=“1” : in case resolver is not connected, or resolver at least one phase is missed, “E-12” trip occurs.
It is necessary to reset the inverter power to enable the changes.
(4) **Use resolver with transformation ratio = 0.5**

■ Set motor parameters

Table 3-3. Motor parameters

Title	Function Name	Parameter Setting	Default Setting
F400	Offline auto-tuning	0: - 1: Reset motor parameters (0 after execution) 2: Auto-tuning at run command (0 after execution) 3: Auto-tuning at TB ON 4: Motor parameters auto calculation (0 after execution) 5: 4+2 (0 after execution) 6: Auto-tuning at run command during TB is ON 7: Auto-tuning F402 only at run command during TB is ON	0
F401	Slip frequency gain	0 – 250%	70
F405	Motor rated capacity (motor name plate)	0.10 – 315.0kW	Depends on type.
F415	Motor rated current (motor name plate)	Depend on capacity	
F417	Motor rated speed (motor name plate)	100 – 64000min^{-1}	
F402	Automatic torque boost	0.01 – 30.00%	
F416	Motor no load current	10 – 90%	
F412	Leakage inductance	0.0 – 25.0%	

The motor parameters require setting according to the motor used. For details, refer to the inverter instruction manual.

3.1.2 Monitoring method for feedback amount

Motor rotation speed can be monitored.
The motor is equipped with status monitor which is displayed on the panel and analog monitor which used analog output terminals ([FM], [AM] terminals)

Set items (1) or (2) for motor speed monitoring.
(1) Speed feedback (real-time value) with sign(+/-) (Unit: Hz/free unit)
The real-time display of motor speed can be made (Monitor display setting: “153”).
(2) Speed feedback (one-second filter) with sign(+/-) (Unit: Hz/free unit)
The filtered motor speed (feedback value) is displayed. (Monitor display setting: “154”).

The monitoring for the above (1) or (2) is possible also in cases except for <Pt> = “10, 11, 12 (PG feedback vector control operation)”. For example, the monitoring can be used for confirmation of the initial PG feedback amount in open loop (V/f operation and the like).

<Setting method for status monitoring>

In order to monitor motor rotation speed in condition monitoring, it is necessary to change the setting for extended parameters (<F710> to <F718>).
Refer to Monitoring Operating Condition section of the inverter manual.

<Setting method for analog monitoring>

In order to monitor motor rotation speed by the analog output terminal, it is necessary to change the setting for basic parameters (<FMSL>, <FM>).
Refer to Meter Setting and Calibration section of the inverter manual.

3.1.3 Confirmation of resolver's rotational direction

Resolver’s connection in Sin, Cos waves and rotational direction of motor can be confirmed as follows.
Set the parameters changed back to the original values following confirming the rotational direction.

(1) Set parameter <Pt: V/f pattern> = “0: constant torque characteristics”.
(2) Set parameter <F711: status monitor 1 display selected> = “153: Signed speed feedback (real-time value)”.
(3) Enter an operating command for positive rotation and command frequency of 1-10Hz to the inverter.
(4) Confirm the motor be turning in the positive direction.
(5) Display status monitor “1” by using the status monitor indication of inverter.
(6) Monitor display, when resolver signal input is determined positive turn 3Hz, “+3.0” is indicated into the display. When it is determined negative turn 3.0Hz, “-3.0” is indicated. When determined negative rotation, resolver's Sin, Cos waves connections and motor wiring are not correct. They must be corrected.

3.1.4 Abnormal speed detection function

■ Parameter

Table 3-4. Parameters for abnormal speed detection

Title	Function Name	Adjustment Range	Default Setting
F622	Abnormal speed detection time	0.01 – 100.00sec	0.01
F623	Abnormal speed increase band	0.0: Disabled, 0.01 – 30.00Hz	0.00
F624	Abnormal speed decrease band	0.0: Disabled, 0.01 – 30.00Hz	0.00

■ **Functions**

If speed feedback (Estimated speed) > (Output frequency + <F623>) or speed feedback (Estimated speed) < (Output frequency - <F624>), and a certain period of time set with <F622: Abnormal speed detection time>, a trip occurs.
You can provide range for a detection level of a trip with a setting of <F623: Abnormal speed increase band> and <F624: Abnormal speed decrease band>.
During torque control, if speed feedback (Estimated speed) > (Speed upper limit + <F623>) or > (Speed lower limit - <F624>) a certain period of time set with <F622: Abnormal speed detection time>, “E-13” trip occurs.

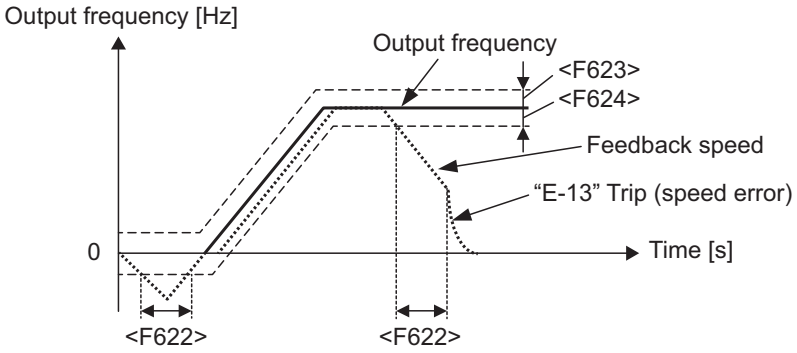

3.1.5 Accuracy of speed control

The accuracy of speed control with the PG feedback can be obtained by the following formulae.

Accuracy of speed control = Command frequency accuracy + feedback detection accuracy

$$\text{Command frequency accuracy} = \pm \frac{0.01\ (\text{Hz})}{F_c\ (\text{Hz})} \times 100 \times \frac{1}{2}\ [\%]$$

(using digital command)

$$\text{Feedback detection accuracy} = \pm \frac{1}{(F_C / (P / 2)) \times PG \times PH \times (1 / R_T)} \times 100 \times \frac{1}{2}\ [\%]$$

F_C : Inverter output frequency
P : Number of motor poles
PG : 2048
PH : 4
R_T : Speed response, see the value in the table below as a reference

Motor capacity	Speed response R_T
- 2.2 kW	300 rad/s
3.7 kW - 7.5 kW	180 rad/s
11 kW -	90 rad/s

3.1.6 Easy positioning PID control

■ **Functions**

This function, which is aimed at a retaining the load at standstill at its normal stop position, is used along with the speed sensor vector control function to prevent the position of an elevator at standstill from shifting.
Switching to position control takes place when the load is at a standstill.
The settings of these parameters take effect only in sensor speed control mode.
Please refer to E6582112 in detail.

4. Specification

Item	Specification
Type form	VEC010Z
Product name	Resolver option
Function	Resolver interface
Applicable Resolver	Transformation ratio: 0.5 Excitation carrier frequency: 3 to 12 kHz
Recommended Cable	Multi-layer shielded cable Size: 0.25 mm^2 (AWG23) for signal line 0.5 mm^2 (AWG20) for excitation voltage Length: 100 m or less
Connector	D subminiature connector (DE-9)
Applicable model	VF-AS3 (Applicable on slot B)
Full-vector operation with sensor	Speed control operation: 150% torque at zero speed Speed control range: 1:1000 Speed accuracy: ± 0.02% (50 Hz base digital input) Torque control operation: Torque control accuracy: ± 10% Torque control range: -100 to 100%
Operation Environment	Inverter operating temperature is limited to 50°C or less. In accordance with inverter for other operation environment.
Storage temperature	-25 to 70°C

5. Warranty

Any part of the Resolver option that proves defective will be exchanged free of charge under the following conditions:

(1) This warranty applies only to the Resolver option.

(2) Any part of the Resolver option which fails or is damaged under normal installation and use within twelve months from the date of delivery shall be exchanged free of charge.

(3) For the following kinds of failure or damage, the exchanged cost shall be borne by the customer even within the warranty period.

- Failure or damage caused by improper or incorrect use or handling, or unauthorized repair or modi-fication of the Resolver option
- Failure or damage caused by the Resolver option falling or an accident during transportation after the purchase
- Failure or damage caused by fire, salty damage, corrosive gas, earthquake, storm or flood, lightning, abnormal voltage supply, or other natural disasters
- Failure or damage caused by the use of the Resolver option for any purpose or application other than the intended one

(4) All expenses incurred by Toshiba for on-site services shall be charged to the customer, unless a service contract is signed beforehand between the customer and Toshiba, in which case the service contract has priority over this warranty.

6. Disposal

⚠ CAUTION

Mandatory action	• If you dispose of Resolver option, have it done by a specialist in industry waste disposal[*1]. If you dispose of Resolver option by yourself, this can result in production of noxious gases, resulting in injury.

*1 Persons who specialize in the processing of waste and known as “industrial waste product collectors and transporters” or “industrial waste disposal persons”. Please observe any applicable law, regulation, rule or ordinance for industrial waste disposal.

When you dispose of your old Resolver option, ask a specialist in industry waste disposal. Failure to do so results in injuries due to generation of noxious gas.