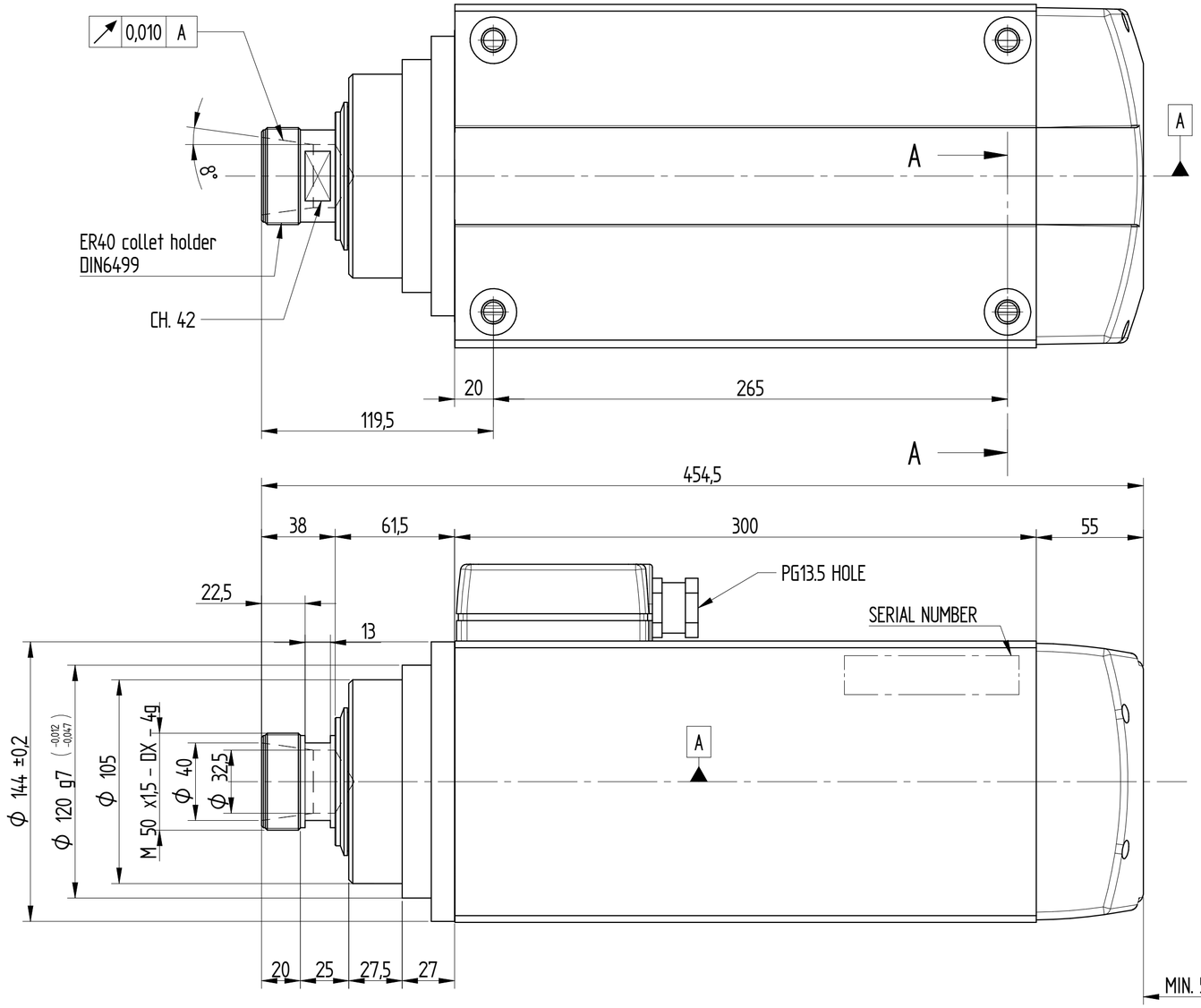

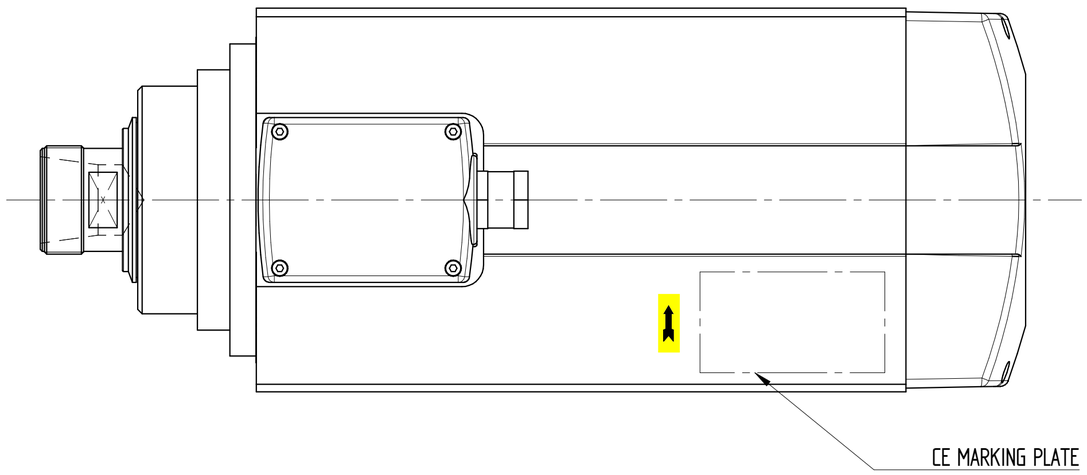

P2

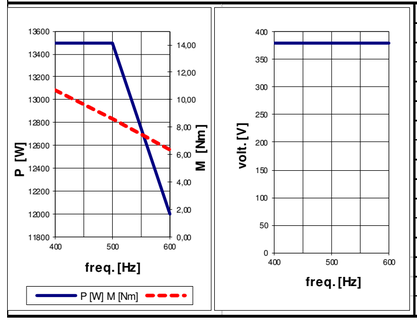

PERFORMANCES AND MOTOR RATINGS				
Voltage	V ±10%	380	380	380
Output Power	kW	13,5 (16,2)	13,5 (16,2)	12 (14,4)
Current	A	31 (37,2)	31 (37,2)	31 (37,2)
Frequency	Hz	400	500	600
rpm	rpm	12000	15000	18000
Torque	Nm	10,74	8,59	6,37
Front Bearing		angular contact ceramic		
Post. Bearing		angualr contact		
Efficiency	η	0,83		
Power factor	cos φ	0,73		
Poles		4		
Service type		S1 (S6 40%)		
Insulation class		F		
Cooling		Fan		
Weight/	Kg	~35		
Type of Protection	IP	50		

SECTION A–A

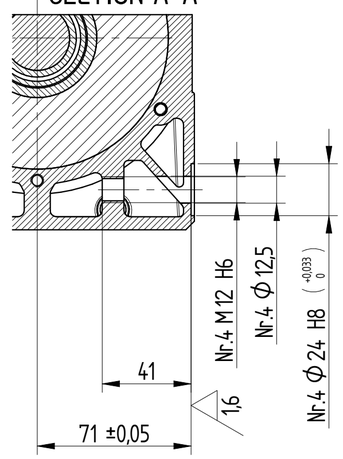

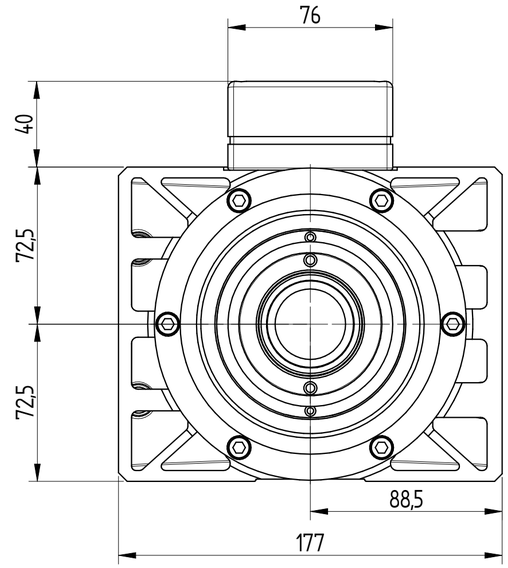

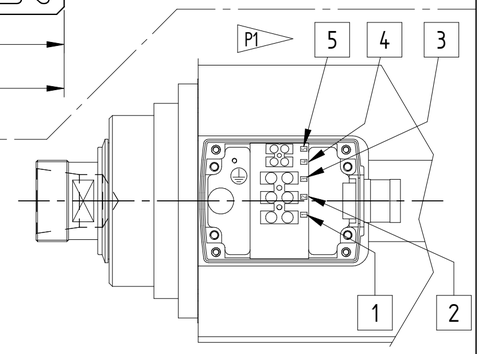

Connection to the terminal board

ELECTRICAL CONNECTIONS 380V VERSION			
Nr.PIN	Description	12/18000 rpm	
1	FASE R	WHITE	
2	FASE S	RED	
3	FASE T	BLACK	
4	PTC		
5	PTC		

REV.	REVISION DESCRIPTION	N°	N° CR	/ DATE
P0				
P1				
P2		/		

	DRAWN BY	CHECKED BY	APPROVED BY
DATE	10/02/2016	18/05/2021	
SIGN	Mehmedovic N.	F. Vitali	

WEIGHT : ~35 kg
RAW BY :
RAW CODE :

MATERIAL:
HEAT TREATMENT:
SURFACE TREATMENT :
DESCRIPTION : ELECTROSPINDLE [MT1120-170-NE-ER40-380V-DX-12/18000-13,5KW-CA]

ELEKTROMOTOREN.DE World in Motion

SIGN: L. Bustelli
STATUS: Prototype
A2
SCALE : 1:2 SHEET : 1 / 1 UNIT : mm
DIMENSIONS WITHOUT TOLERANCE INDICATIONS
MACHININGS :
WELDED STRUCTURES :
CASTINGS - EXTRUDED -MOULDED :
PAINTING CYCLE :
CODE H6162H0127 REVISION P2

REPRODUCTION AND OR DISCLOSURE OF THE DRAWING IS FORBIDDEN