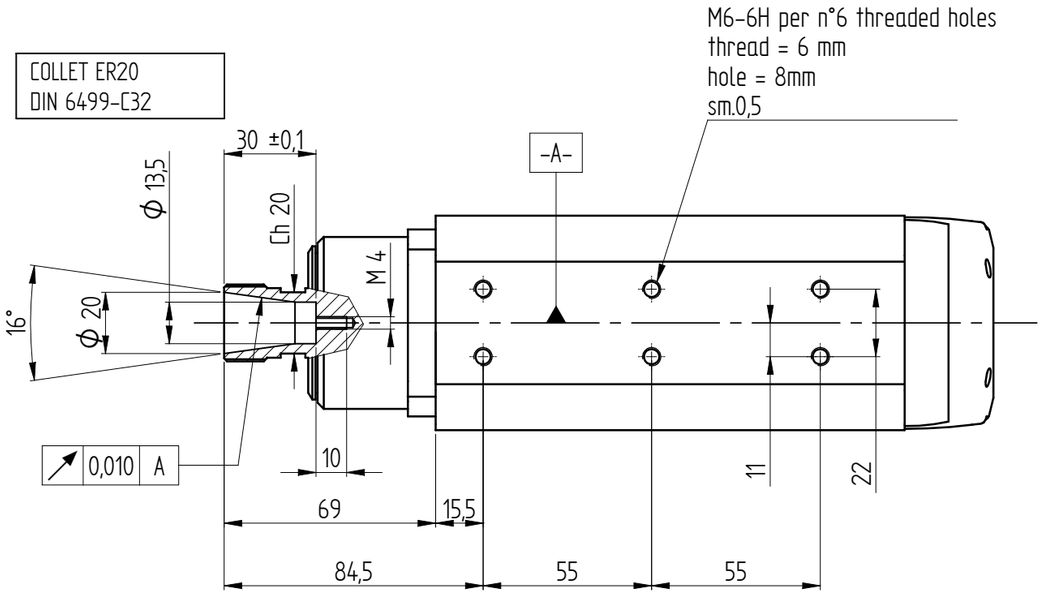


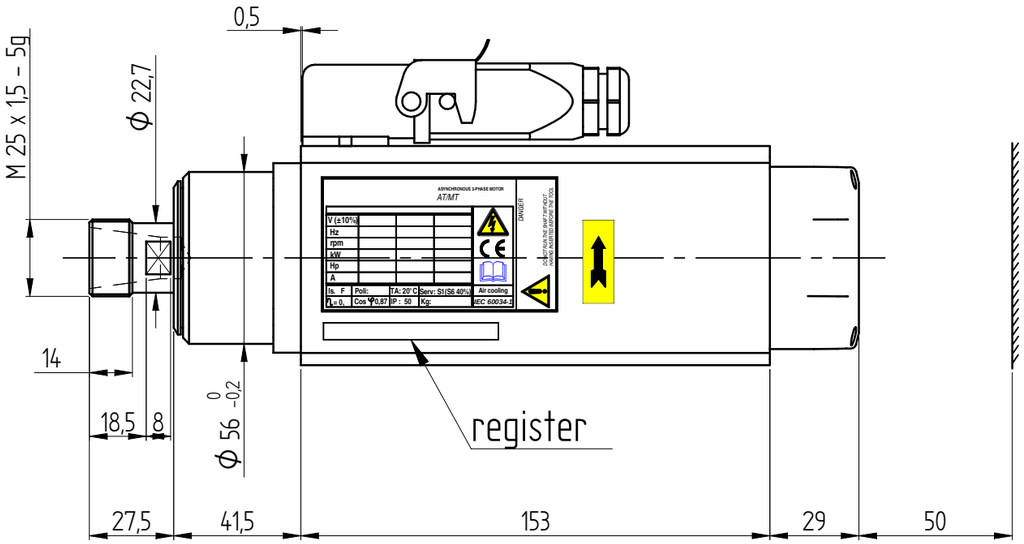


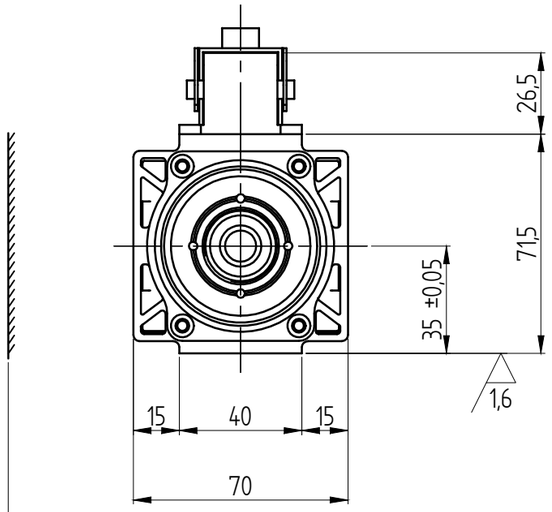


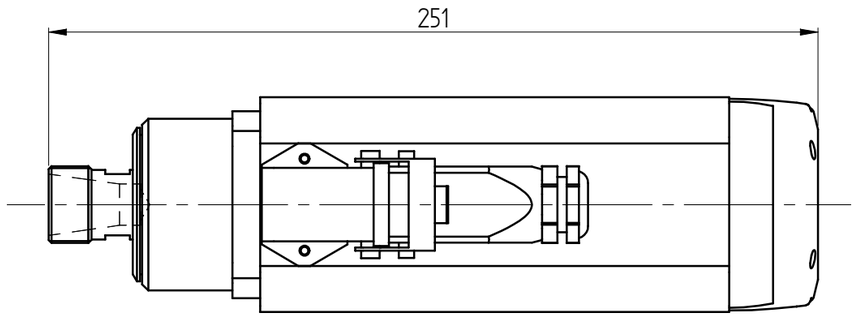


## PERFORMANCES AND MOTOR RATINGS

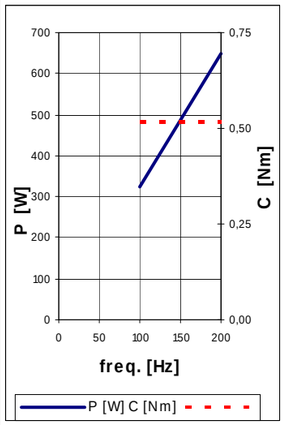


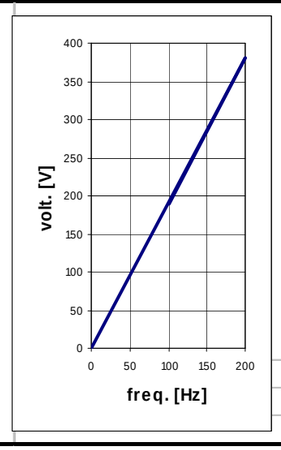


| | | | | |
|---|---|---|---|---|
| Voltage | V ±10% | 380 | 0 | 0 |
| Output Power | kW | 0,65 (0,85) | 0 | 0 |
| Current | A | 1,8 (2,3) | 0 | 0 |
| Frequency | Hz | 200 | 0 | 0 |
| rpm | rpm | 12000 | 0 | 0 |
| Torque | Nm | 0,52 (0,68) | 0,00 | 0,00 |
| Front Bearing | | angular contact bearings | | |
| Post. Bearing | | radial | | |
| Efficiency | η | 0,65 | | |
| Power factor | cos φ | 0,75 | | |
| Poles | | 2 | | |
| Service type | | S1 (S6 40%) | | |
| Insulation class | | F | | |
| Cooling | | elec. ventilation | | |
| Weight | Kg | 3,5 | | |
| Type of Protection | IP | 50 | | |

## ELECTRIC CONNECTIONS

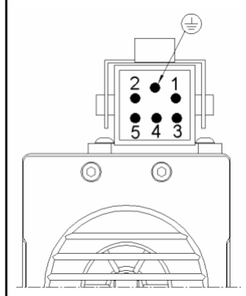


| Nr. Pin | Description |
|---|---|
| 1 | U Fase / *Motor phase* |
| 2 | V Fase / *Motor phase* |
| 3 | W Fase / *Motor phase* |
| 4 | ** *Bi-metallic* |
| 5 | ** *Bi-metallic* |
| ⏚ | *Earth connection* |

** See "User's guide" for technical informations

ELEKTROMOTOREN.DE
World in Motion

www.elektromotoren.de

| | | | | | |
|---|---|---|---|---|---|
| 1 | | | | 10/01/08 | L.B. |
| REV. | | | | DATA | FIRMA |
| | | | | 1:2 | A3 |
| DATA | 18/12/06 | 18/12/06 | | | 22768-1f 22768-2H |
| FIRMA | | | | | |

1

A#05562 HM55A-090
MT1055-090-ER20-380V-DX-12/12000-0,65KW S1

Y6162Y0002