

▪ QUICK SELECTION

input speed (n_1) = 1400 min^{-1}

Output Speed n_2 [min^{-1}]	Ratio i	Motor power P_{1M} [kW]	Output torque M_{2M} [Nm]	Service factor f.s.	Nominal power P_{1R} [kW]	Nominal torque M_{2R} [Nm]	Available B5 motor flanges -A 56	-B 63	-C 71	Available B14 motor flanges -P 63	-Q 71	Dynamic efficiency RD	Tooth Module [mm]	Ratios code
47	**30.1**	0.25	38	1.4	0.36	55				C		74	2.2	01
33	**43.0**	0.25	53	1.0	0.26	55				C		72	2.2	02
23	**60.2**	0.25	62	0.9	0.22	55				C		60	2.4	03
15.5	**90.3**	0.12	42	1.3	0.16	55				C		57	1.6	04
11.6	**120**	0.12	52	1.1	0.13	55				C		53	2.5	05
8.8	**159**	0.12	64	0.9	0.10	55				C		49	1.8	06
7.1	**198**	0.12*	55	<0.8	0.09	55				C		47	1.5	07
5.4	**258**	0.12*	55	<0.8	0.07	55				C		45	1.2	08
4.7	**301**	0.12*	39	<0.8	0.05	39				C		40	1.0	09
3.2	**439**	0.12*	39	<0.8	0.04	39				C		36	0.72	10

Motor Flanges Available — B) Supplied with Reduction Bushing — B) Available on Request without reduction bushing — C) Motor Flange Holes Position

*** Power higher than the maximum one which can be supported by the gearbox. Select according to the torque M_{2R}**

EN Unit **P4M** is supplied with synthetic oil, providing "long life" lubrication. For mounting position V5-V6 please contact us.
See table 1 for lubrication and recommended quantity.
In table 2 please see possible radial loads and axial loads on the gearbox.

I Il riduttore tipo **P4M** viene fornito lubrificato a vita con olio sintetico. Per posizioni V5-V6 contattare il ns. servizio tecnico.
Vedi tab.1 per oli e quantità consigliati.
In tab.2 sono presenti i carichi radiali e assiali applicabili al riduttore.

D Für die Lebensdauerschmierung ist das Getriebe der Größe **P4M** mit synthetischem Öl befüllt.
Bei Einbaulage V5 oder V6 bitten wir um Rücksprache.
In Tabelle 1 ist die Schmiermenge und das empfohlene Schmiermittel angegeben.
In Tabelle 2 sind die zulässigen Radial - und Axialbelastungen des Getriebes aufgeführt.

F Le réducteur de type **P4M** est fourni lubrifié à vie avec de l'huile synthétique. Concernant les positions V5.V6, contactez notre service d'assistance technique.
Voir tableau 1 concernant les huiles et les quantités conseillées.
Les charges radiales et axiales applicables au réducteur sont précisées dans le tableau 2.

E El reductor tamaño **P4M** se suministra, lubricado de por vida con aceite sintético. Para las posiciones V5 y V6 contactar con nuestro servicio técnico.
Ver tabla 1, para cantidades y aceites recomendados.
En la tabla 2, se encuentran las cargas radiales y axiales admitidas por el reductor.

▪ LUBRICATION P4M Oil

Common lubrication 0.17 l (A + B).

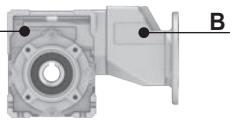

SHELL Omala S4 WE 320	**ENI** Telium VSF 320

For all details on lubrication and plugs check our website **tab. 1**

▪ RADIAL AND AXIAL LOADS

Output shaft

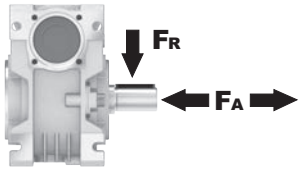

n_2 [min^{-1}]	FA [N]	FR [N]
75	240	1200
50	260	1400
25	300	1800
15-6	400	2000

Input shaft

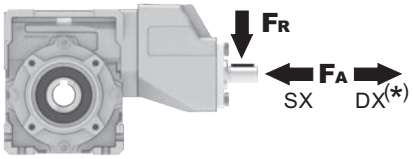

n_1 [min^{-1}]	FA [N]	FR [N]
1400	44	220

***Strong axial loads in the DX direction are not allowed.**

tab. 2

ELEKTROMOTOREN.DE World in Motion

PP4M**FB**... Basic wormbox

M. flanges	Kit code	øF	A
56B5	K050.4.046	120	143.5
63B5	K050.4.041	138	145.5
71B5	K050.4.042	160	143
63B14	K050.4.047	90	145.5
71B14	K050.4.045	105	143

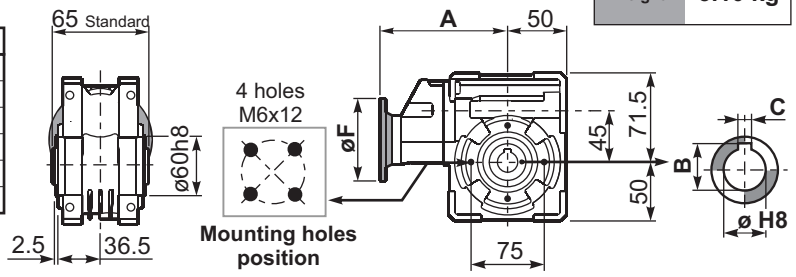

Gearbox weight **3.10 kg**

ø H8	B	C	*Spacer code
18 Standard	20.8	6	KM45.3.018
19 on request	21.8	6	KM45.3.019
20 on request	22.8	6	KM45.3.020

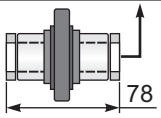

***On Request**
output shaft with spacers

PP4M**FC**... Square flange

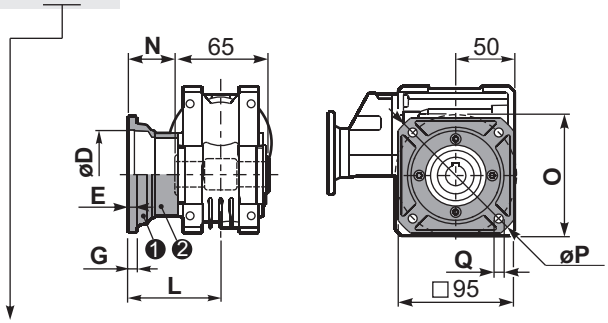

type **B**	øD	E	G	L	N	O	P	Q	kit code
FC	60 H8	4	7	67	34.5	75	110	9	KM45.9.010
FL	60 H8	4	7	97	64.5	75	110	9	KM45.9.011

PP4M**F1**... Round flange

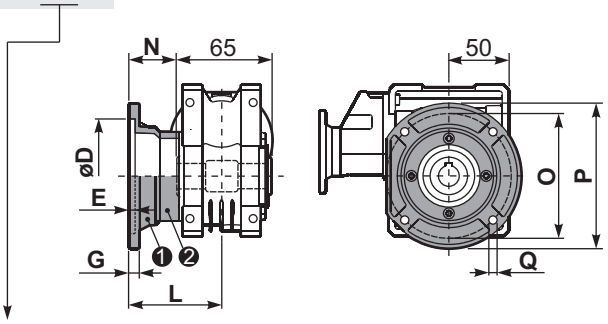

type **S**	øD	E	G	L	N	O	P	Q	kit code
F1	95H8	5	9	80	47.5	115	140	9.5	KM45.9.012
F2	-	-	-	-	-	-	-	-	-

PP4M**FB**... Feet

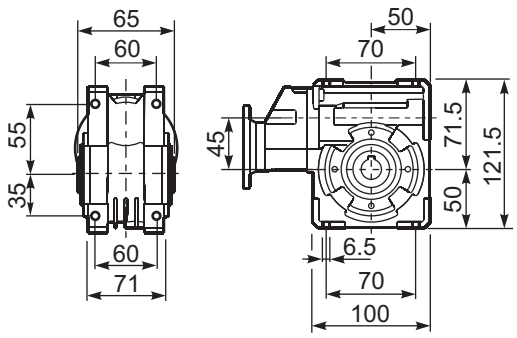

PP4M**BR**... Reaction arm

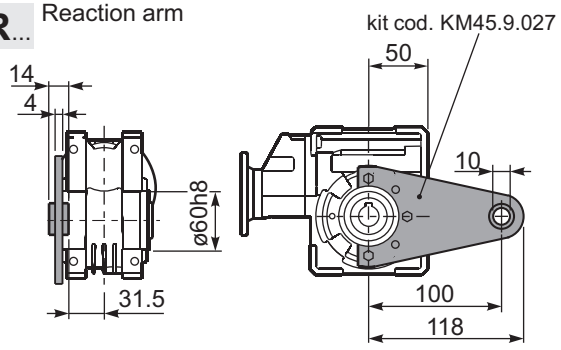

RP4MFB... Input shaft

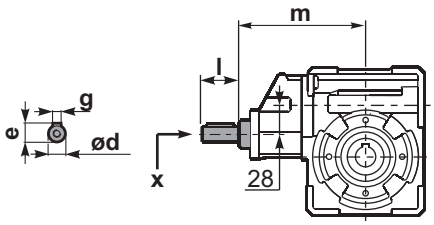

PP4M.....**S**... Single Shaft

PP4M.....**D**... Double Shaft

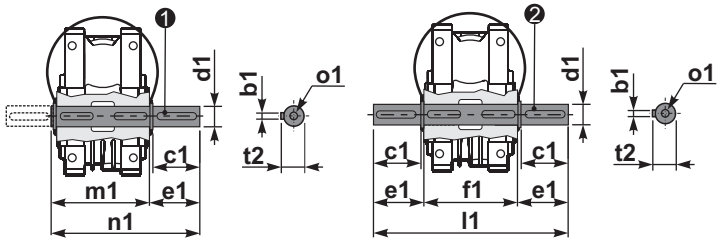

❶ kit cod. K045.5.028 type **B**
kit cod. KS045.5.030 type **S**

❷ kit cod. K045.5.029 type **B**

	ød	e	g	l	m	x	
type **B**	14 h6	16	5	25	141	M5x13	C35.5.061
type **S**	-	-	-	-	-	-	-

	b1	c1	d1	e1	f1	l1	m1	n1	t2	o1
type **B**	6	32	18 $^{-0.005}_{-0.020}$	43	65	151	70	113	20.5	M6x18
type **S**	6	40	19 $^{-0.005}_{-0.020}$	58.5	-	-	70	128.5	21.5	M8x20