Unidrive M Options

System Integration Modules
Drive Interface Units
Keypads

Leading the way in variable speed drive technology

Unidrive M – the drive for industrial applications

Unidrive M is a family of six variable speed drives designed for industrial applications. Each Unidrive M model has been designed for specific application needs identified through extensive market research. Unidrive M is evolving the future of industry with the latest drive technology which includes 21 patents granted and 42 patents pending.

Integrate, automate and communicate with Unidrive M options

Unidrive M supports a wide range of option modules and interface units which allow the drive to integrate seamlessly with existing systems. Options include feedback, communications, applications (onboard PLCs), I/O and enhanced safety features.

Unidrive M uses a high speed parallel bus between the drive and SI modules, improving reaction time. Communications interfaces are independently certified for conformance with the relevant standards to ensure performance and interoperability.

MCi200/MCi210 options substantially extend Unidrive M's machine control capability using the latest generation of microprocessor technology. These modules are configured using the industry standard IEC61131-3 programing environment.

Combined with its onboard performance, this makes Unidrive M the market-leading industrial drive.

This guide is designed to give an overview of Unidrive M's comprehensive range of option modules, including:

- An explanation of their function
- Key specification details
- Compatibility with Unidrive M drives
- Terminal descriptions

INDEX

Machine Control	pages 6 - 9
Safety	pages 10 - 11
Communications	pages 12 - 17
Feedback	pages 18 - 20
Additional I/O	page 21
Keypads	page 22
Drive Interface Units	pages 23

Unidrive M Option Module Overview

The table below summarizes all the option modules that function with the Unidrive M product family drives. More detailed information on each can be found later in this guide.

Unidrive M option module summary table

Option	Type	Applicable to					
		M100	M200	M300	M400	M600	M700
System Integration (SI) Modules							
MCi200	Machine Control						•
MCi210							•
SI-Applications Plus							•
SI-Safety	Safety					•	•
SI-Ethernet	Communications		•	•	•	•	•
SI-PROFINET			•	•	•	•	•
SI-EtherCAT			•	•	•	•	•
SI-CANopen			•	•	•	•	•
SI-PROFIBUS			•	•	•	•	•
SI-DeviceNet			•	•	•	•	•
SI-Encoder	Feedback					•	•
SI-Universal Encoder						•	•
SI-I/O	Additional I/O		•	•	•	•	•
Keypads							
Fixed LED keypad	User interface	M100	M200	•			
Fixed LED keypad with speed reference potentiometer		M101	M201				
CI-Keypad					•		
Remote keypad			•	•	•	•	•
KI-Keypad						•	•
KI-Keypad RTC						•	•
Drive interface units							
SD Card Adaptor	Back-up					•	•
Smartcard						•	•
AI-Back-up Adaptor		•	•	•	•		
AI-Smart Adaptor		•	•	•	•		
AI-485 Adaptor	Communications		•	•	•		
CI-485 Adaptor					•		
KI-485 Adaptor						•	•
CT USB Comms cable			• *	• *	• *	•	M701

*also requires an adaptor

Option module interface locations on Unidrive M

M100 to M400

AI-485 Adaptor for RS485 communications (M200 to M400 only)

AI-Back-up Adaptor allows the drive to use an SD card for parameter cloning and acts as an input for 24 V back-up

AI-Smart Adaptor contains built in 4 GB memory for parameter cloning and applications programs, and an input for 24 V back-up

CI-Keypad - intuitive plain text multilingual back-lit LCD keypad for rapid set-up and superior diagnostics (M400 only)

Adaptor that allows the drive to communicate via RS485

Optional IP66 (NEMA4) Remote Keypad available for Panel mounting (M200 to M700)

System Integration (SI) module slot for optional communications and additional I/O (M200 to M400 only)

M600 to M700

Range of multi-language LCD keypads available for rapid set-up and superior diagnostics; KI-485 Adaptor available for additional communications via RS485 on Modbus RTU

Slot for Smartcard / SD card for parameter, PLC and motion program storage

Optional IP66 (NEMA4) Remote Keypad available for Panel mounting (M200 to M700)

System Integration (SI) module slots for communications, I/O, additional feedback devices and automation/motion controllers (MCi)

- 3 slots on M600 and M700

Machine Control Modules

Unidrive M's MCi200 and MCi210 modules extend machine control capability when combined with the Advanced Motion Controller embedded in Unidrive M700. Enabling easy connectivity of additional machine components and application software, MCi200 and MCi210 create a complete application solution. As a result of the highly flexible plug-in option module format, system design is streamlined by removing the need for PLCs and additional external equipment. Machine control is fast and easy to achieve thanks to Unidrive M's user friendly programming software - Machine Control Studio - utilizing the industry-standard open IEC 61131-3 programming environment.

The MCi200 and MCi210 machine control modules provide:

High performance machine control – high speed communications of 250 µs enables optimum performance.

High bandwidth – control multiple drive and motor axes thanks to MCi210's second Ethernet port.

Optimum ease of use – rapidly create machine control programs with Unidrive M's programming software, developed with extensive human centred design research and based on the industry-standard IEC 61131-3 programming environment.

Open environment – Standard IEEE 1588 Ethernet and IEC 61131 software enable open machine control programming, boosting the choice of component connectivity.

Streamlined machine design – plug-in option module format means less wiring, less physical space required and less financial cost, while increasing design simplicity.

User programming

The MCi200 and MCi210 modules are capable of running Machine Control Studio programs. It is an integrated development environment that supports all five of the programming languages of the IEC 61131-3 standard, including Structured Text (ST), Ladder Diagram (LD), Function Block Diagram (FBD), Sequential Function Chart (SFC) and Instruction List (IL). Continuous Function Chart (CFC) is also supported.

Optimum connectivity

Simple integration with external components such as I/O, HMIs and other networked drives can be achieved using Unidrive M's integrated standard Ethernet ports (with RTMoE or standard protocols), or fieldbuses supported by SI option modules (EtherCAT, PROFINET, PROFIBUS, CANopen).

MCi200 & MCi210

M100	M200	M300	M400	M600	M700
					✓

Build high performance systems and productive machines

- MCi modules execute comprehensive programs that can control multiple drives and motors simultaneously across real-time networks
- M700's onboard Ethernet using RTMoE (Real Time Motion over Ethernet) provides synchronization and communication between drives using the Precision Time Protocol as defined by IEEE1588 V2
- Performance is optimized by having a motion controller embedded in each networked drive

The user has a number of tasks available to them as shown in the following table.

Task	Interval
Initial	Executes once when the user program starts
Freewheeling	No timebase
Clock0	User-specified timebase from 1 ms to 24 hours in 1 ms increments
Clock1	
Clock2	
Clock3	
Position	User-specified timebase from 250 µs to < 8 ms in 250 µs increments
Event0	No timebase. This task is triggered (e.g. by the Timer Unit, Ethernet cyclic data etc.)
Event1	
Event2	
Event3	
ErrorTask	No timebase. This task is triggered on a user program error

The Clock and Position tasks are cyclic and will run at an interval set by the user. The Freewheeling task is the lowest priority task and will run when processor resource allows.

MCi210 ensures higher performance by delivering:

- Two additional Ethernet ports with an internal switch
- Support for standard Ethernet protocols, along with RTMoE for PTP (IEEE 1588) synchronization
- Modbus TCP/IP master (up to 5 nodes)
- Parallel interface with drive processor provides faster data exchange
- Machine control over two segregated Ethernet networks enables greater flexibility in machine design
- Extends connectivity with 3 x digital inputs, 1 x digital output and 1 x digital I/O

Segregated network control

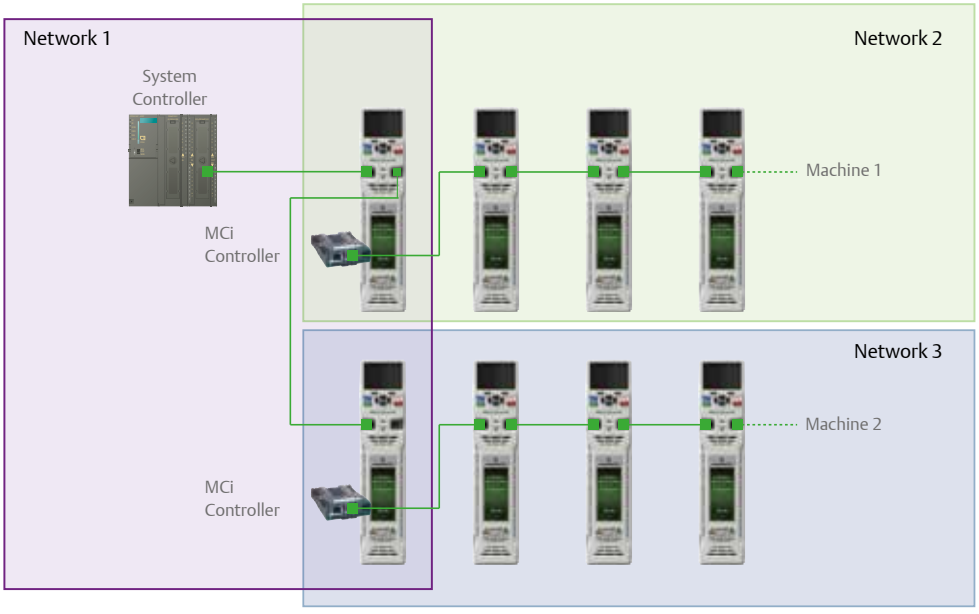

Terminal descriptions

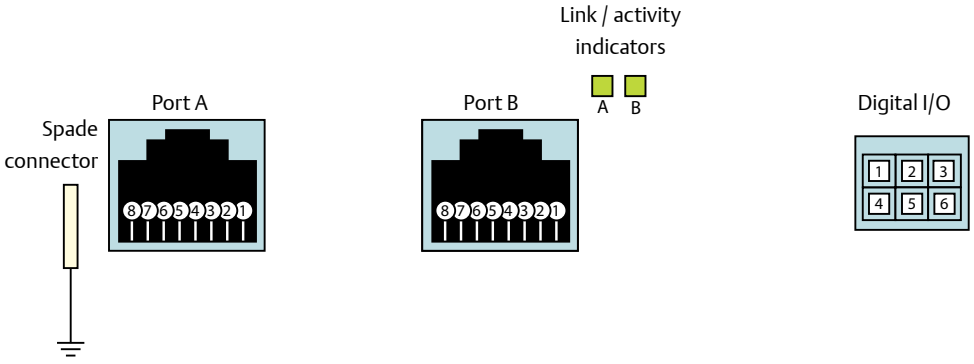

Terminal	Description
1	Transmit +
2	Transmit -
3	Receive +
4	N/A
5	N/A
6	Receive -
7	N/A
8	N/A

Terminal	Description
1	Transmit +
2	Transmit -
3	Receive +
4	N/A
5	N/A
6	Receive -
7	N/A
8	N/A

Terminal	Description
1	Digital input 1
2	Digital input 2
3	Digital input 3
4	Digital I/O 4
5	Digital output 5
6	0 V common

SI-Applications Plus

M100	M200	M300	M400	M600	M700
					✓

SI-Applications Plus modules allow SyPTPro application programs to be recompiled and executed with Unidrive M700 to enable rapid and simple upgrade for Unidrive SP users. Applications comprising networked Unidrive SP drives with SM-Applications using CTNet or CTSync for real-time control can be quickly replaced with Unidrive M and the SI-Applications Plus module without any compromise to system performance.

Features include

- Enhanced high speed dedicated microprocessor
- 384 kB Flash memory for user program
- 80 kB user program memory
- EIA-RS485 port offering ANSI, Modbus-RTU follower and master and Modbus-ASCII follower and master protocols
- CTNet high speed network connection offering up to 5 Mbit/s data rate
- Two 24 V digital inputs
- Two 24 V digital outputs
- Task based programming system for real-time control
- CTSync distributes a master position to multiple drives on a network. Hardware synchronization of speed, position and torque loops achieving a time base of 250 µs

Terminal descriptions

1	2	3	4	5	6	7	8	9	10	11	12	13

Terminal	Function	Description
1	0 V SC	0 V connection for EIA-RS485 port
2	/RX	EIA-RS485 Receive line (negative). Incoming
3	RX	EIA-RS485 Receive line (positive). Incoming
4	/TX	EIA-RS485 Transmit line (negative). Outgoing
5	TX	EIA-RS485 Transmit line (positive). Outgoing
6	CTNET A	CTNet data line
7	CTNET Shield	Shield connection for CTNet
8	CTNET B	CTNet data line
9	0 V	0 V connection for digital I/O
10	DIO	Digital input 0
11	DI1	Digital input 1
12	DO0	Digital output 0
13	DO1	Digital output 1

Safety System Integration Module

SI-Safety

M100	M200	M300	M400	M600	M700
				✓	✓

SIL3 CE RoHS Compliant

The SI-Safety module enhances the safety capability of Unidrive M for the protection of end users. The module also increases machine productivity with safety features which reduce the frequency of machine power-downs. Ensuring machines achieve stringent safety standards, SI-Safety can reduce machine size and cost by removing the need for external safety PLCs and other components.

- **Increase productivity:** SI-Safety minimises downtime as its functionality enables a machine to slow-down or stop, removing the need to power-down the machine after interruption.
- **Enhanced user safety:** Features including Safe Stop and Safe Operating Stop dramatically increase end user safety, as well as safe machine operation with Safe Limited Speed and Safe Limited Position.
- **Achieves the highest safety level:** SI-Safety is approved by TUV as meeting SIL3, the highest safety level attainable for industrial electrical components according to functional safety standards as IEC 61800-5-2.

Standard Safety Functions:

The following SIL3 safety functions defined by IEC 61800-5-2 are available with SI-Safety:

Safe Torque Off	STO	Prevents torque from being generated by the motor. This function is integrated within the drive itself as standard
Safe Stop 1	SS1	Ensures a controlled stop with power available to the motor. Once the stop is achieved the power is then removed.
Safe Stop 2	SS2	Ensures a controlled stop with power left available to the motor
Safe Limited Speed	SLS	Prevents the motor from exceeding a specified speed limit
Safe Limited Position	SLP	Monitors absolute position to ensure the motor operates within specified limits
Safe Brake Control	SBC	Provides a safe output signal to control an external safety brake
Safe Operating Stop	SOS	Prevents the motor from deviating from the stopped position
Safe Direction	SDI	Prevents the motor from moving in the unintended direction
Safe Limited Increment	SLI	Prevents the motor from exceeding the specified limit of position increment
Safe CAM	SCA	Provides a safe signal when the motor position is within a specified range
Safe Speed Monitor	SSM	Provides an indication when the motor speed is below a given limit

Flexible programming environment

CTSafePro

CTSafePro unlocks the full safe PLC functionality within the SI-Safety module. It allows users to combine elements to develop their own safety function blocks to meet the specific needs of more advanced applications.

Terminal descriptions

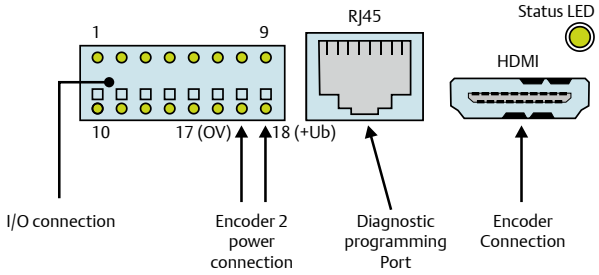

Safety Standards

The module is designed to meet the following safety standards:

- IEC and EN 61508: Functional safety of safety-related electric, electronic and programmable electronic systems
- IEC and EN 62061: Safety of machinery, Functional safety of safety-related electrical, electronic and programmable electronic control systems
- ISO and EN ISO 13849-1: Safety of machinery - Safety-related parts of control systems - Part 1: General principles for design
- IEC and EN 61800-5-2: Adjustable speed electrical power drive systems - Part 5-2: Safety requirements - Functional

I/O Interface		
Terminal	**Designation**	**Function**
1	SMF11	Digital IN SMF11
2	SMF12	Digital IN SMF12
3	SMF21	Digital IN SMF21
4	SMF22	Digital IN SMF22
5	SMF31	Digital IN SMF31
6	SMF32	Digital IN SMF32
7	SMF41	Digital IN SMF41
8	SMF42	Digital IN SMF42
9	E0.5	Digital IN E0.5
10	P1	Clocking output P1
11	P2	Clocking output P2
12	STO	HISIDE output STO
13	SBC1	HISIDE output SBC1
14	SBC2	HISIDE output SBC2
15	A0.1	Signal and auxiliary output A0.1
16	A0.2	Signal and auxiliary output A0.2
17	L-ENC 1/2	Sensor power supply for sensor interface GND ENC 1/2
18	L+ENC2	Sensor power supply for sensor interface SUPPLY ENC2

Encoder interface HDMI			
Pin	**Designation**	**Encoder**	**Function**
1	A+(COS+)/DATA+	ENC1	Incremental track A+ / data wire DATA+
2	SHIELD		
3	A-(COS-)/DATA-	ENC1	Incremental track A- / data wire DATA-
4	B+(SIN+)/CLK+	ENC1	Incremental track B+ / data wire CLOCK+
5	SHIELD		
6	B-(SIN-)/CLK	ENC1	Incremental track B- / data wire CLOCK-
7	A+(COS+)/DATA+	ENC2	Incremental track A+ / data wire DATA+
8	SHIELD		
9	A-(COS-)/DATA-	ENC2	Incremental track A- / data wire DATA-
10	B+(SIN+)/CLK-	ENC2	Incremental track B+ / data wire CLOCK+
11	SHIELD		
12	B-(SIN)/CLK-		Incremental track B- / data wire CLOCK-
13	L+	ENC1	Power supply for SUPPLY sensor interface
14	L+	ENC1	Power supply for SUPPLY sensor interface
15	L-	ENC1/2	Power supply for GND sensor interface
16	L-	ENC1/2	Power supply for GND sensor interface
17	L+	ENC2	Power supply for SUPPLY sensor interface
18	L+	ENC2	Power supply for SUPPLY sensor interface
19	NC		

Communications System Integration Modules

SI-Ethernet

M100	M200	M300	M400	M600	M700
	✓*	✓*	✓*	✓*	✓

* Does not support synchronous cyclic data exchange

SI-Ethernet supports real-time Ethernet (IEEE 1588 V2 Precision Time Protocol), HTTP, SMTP, EtherNet/IP and Modbus TCP/IP. The module can be used to provide high speed drive access, global connectivity and integration with IT network technologies, such as wireless networking.

Features include:

- Real-time Ethernet (IEEE 1588 V2 Precision Time Protocol), Modbus TCP/IP, EtherNet/IP
- Network synchronization of less than 1 µs jitter (typically <200 ns)
- 1 ms cycle time for synchronous cyclic data
- Bandwidth protection through a network gateway that manages non-real-time Ethernet messages
- Master/follower and peer-to-peer communications capabilities
- Addressing is IP based
- Dual 100 BASE-TX RJ45 connectors with support for shielded twisted pair, full-duplex 100 Mbps connectivity with auto crossover correction
- Integrated switches allow for use of line networks i.e. daisy chaining
- Both ports operate in full duplex mode as a network switch
- LED indication of network port activity

Terminal descriptions

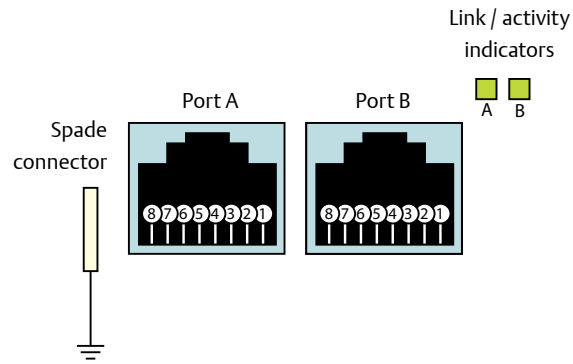

Terminal	Description
1	Transmit +
2	Transmit -
3	Receive +
4	N/A
5	N/A
6	Receive -
7	N/A
8	N/A

Terminal	Description
1	Transmit +
2	Transmit -
3	Receive +
4	N/A
5	N/A
6	Receive -
7	N/A
8	N/A

SI-PROFINET

M100	M200	M300	M400	M600	M700
	✓	✓	✓	✓	✓

SI-PROFINET allows Unidrive M to communicate and interface with PROFINET PLCs and networks.

Features include:

- Dual 100 BASE-TX RJ45 connectors with support for shielded twisted pair, full-duplex 100 Mbps connectivity with auto crossover correction
- Integrated switches allow for use of line networks i.e. daisy chaining
- Both ports operate in full duplex mode as a network switch
- PROFINET Real-time class RT_Class_1 and conformance class A
- Cycle times from 2 ms to 512 ms specified during configuration
- Automatic device replacement using the LLDP and DCP protocols
- LED indication of network port activity
- Up to 64 cyclic I/O module slots (maximum of 32 in and 32 out) configured by network configuration tool and GSDML file
- Identification and maintenance functions I&M0 to I&M4 supported

Terminal descriptions

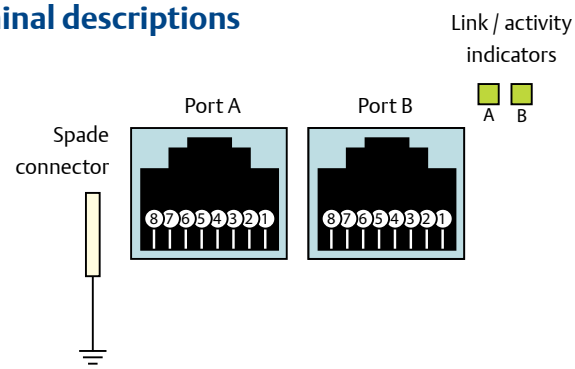

Terminal	Description
1	Transmit +
2	Transmit -
3	Receive +
4	N/A
5	N/A
6	Receive -
7	N/A
8	N/A

Terminal	Description
1	Transmit +
2	Transmit -
3	Receive +
4	N/A
5	N/A
6	Receive -
7	N/A
8	N/A

SI-EtherCAT

M100	M200	M300	M400	M600	M700
	✓	✓	✓	✓	✓

SI-EtherCAT allows Unidrive M to connect and interface with EtherCAT networks.

Features include:

- Up to 64,535 nodes on a segment
- Data rate of 100 Mbps (100BASE-TX)
- Update 40 axes in 250 µs (assuming 2 words command data and 3 words feedback data per axis, a control word and basic cyclic synchronization data)
- Jitter of less than 1 µs with Unidrive M600 to M700
- Non-cyclic data using the CoE mailbox
- CANopen DS-402 profile supported (drives and motion control)
- LED indication of network port activity

Terminal descriptions

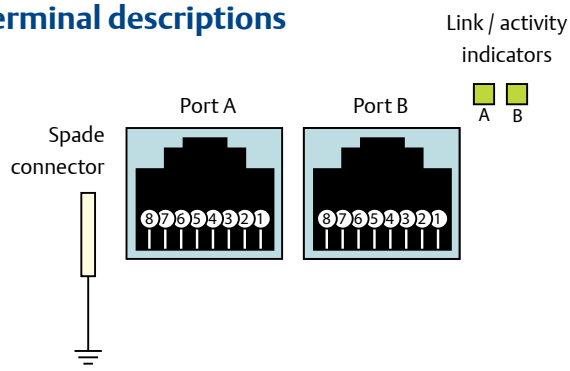

Terminal	Description
1	Transmit +
2	Transmit -
3	Receive +
4	N/A
5	N/A
6	Receive -
7	N/A
8	N/A

Terminal	Description
1	Transmit +
2	Transmit -
3	Receive +
4	N/A
5	N/A
6	Receive -
7	N/A
8	N/A

SI-CANopen

M100	M200	M300	M400	M600	M700
	✓	✓	✓	✓	✓

Unidrive M's CANopen interface module supports various profiles including several drive profiles. SI-CANopen has been designed to offer optimum flexibility: in particular the process data objects (PDO) numbering system has been specifically designed to offer maximum versatility while maintaining conformance to CiA specifications.

Features include:

- Supported data rates (bits/s): 1 M, 800 k, 500 k, 250 k,125 k, 100 k and 50 k
- 4 transmit and 4 receive PDOs A, B, C and D supported
- Independently configurable transmit and receive PDO numbers (1-511) for maximum application flexibility
- All synchronous and asynchronous PDO communication modes supported
- Total of 32 bytes (16 words) in each direction using PDOs (4 TxPDOs of 64 bits and 4 RxPDOs of 64 bits)
- Service Data Objects (SDO) provide access to all drive and option module parameters
- Consumer heartbeat
- Emergency message completed flag
- RxPDO, SYNC and missed heartbeat event handling
- RxPDO event triggers
- TxPDO event triggers
- Object association for un-defined DSP-402 objects
- +24 V back-up power supply capability

Terminal descriptions

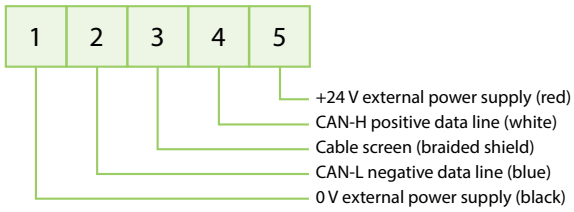

SI-PROFIBUS

M100	M200	M300	M400	M600	M700
	✓	✓	✓	✓	✓

Unidrive M's PROFIBUS-DP interface module enables follower connectivity. It is possible to use multiple SI-PROFIBUS modules or a combination of SI-PROFIBUS and other option module types to add additional functionality such as extended I/O, gateway functionality or additional PLC features.

Features include:

- Supported data rates (bits/s): 12 M, 6.0 M, 3.0 M, 1.5 M, 500 k, 187.5 k, 93.75 k, 45.45 k, 19.2 k, 9.6 k
- Maximum of 32 input and 32 output cyclic data words supported
- PROFIdrive profile (V2 & V4) supported
- Non-cyclic data channel supported
- Parallel acyclic/cyclic data communication

Terminal descriptions

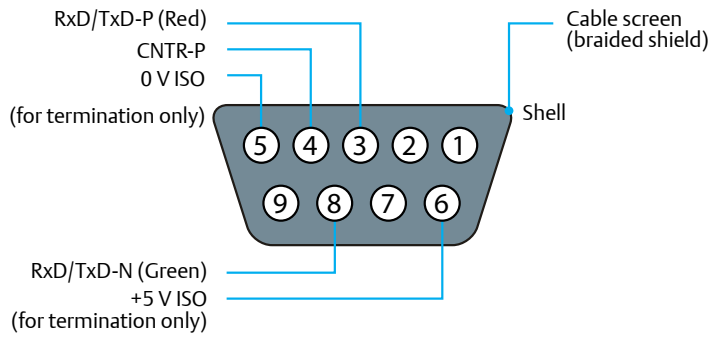

SI-DeviceNet

M100	M200	M300	M400	M600	M700
	✓	✓	✓	✓	✓

SI-DeviceNet enables follower connectivity. It is possible to use multiple SI-DeviceNet modules or a combination of SI-DeviceNet and other option module types to provide additional functionality such as extended I/O, gateway functionality or additional PLC features.

Features include:

- Supported data rates (bits per s): 500 k, 250 k, 125 k
- 1 to 28 input/output polled data words supported
- Explicit communications (non-cyclic) provide access to all drive parameters
- 8 pre-defined DeviceNet profiles supported

Terminal descriptions

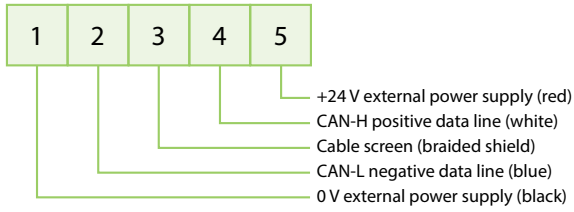

Feedback System Integration Modules

SI-Encoder

M100	M200	M300	M400	M600	M700
				✓	✓

SI-Encoder has an incremental encoder input to provide Closed loop Rotor Flux Control for induction motors (RFC-A) on M600 and an additional encoder input on M700.

Features include:

- Supports AB quadrature encoders without marker pulse

Terminal descriptions

1	2	3	4	5	6	7

Pin Number	Function
1	A
2	/A
3	B
4	/B
5	Power Supply +
6	Power Supply 0 V *1
7	Power Supply 0 V *1

*1: Two 0 V terminals are provided so that the shield of the encoder cable can be independently connected to 0 V without requiring dual wire (twin) crimp ferrules. This provides a system which is easier to wire and debug electrical noise issues.

SI-Universal Encoder

M100	M200	M300	M400	M600	M700
				✓	✓

The dual encoder port on the Unidrive M700 supports two position feedback interfaces, P1 & P2, through a 15-way high density D-type connector. The SI-Universal Encoder complements this by enabling additional input and output formats to be used that could not otherwise be supported by the single 15 pin connector. It also provides Closed loop Rotor Flux Control for induction motors (RFC-A) on M600.

Features include:

Support for:

- SinCos with communications
- SinCos with or without commutation
- Quadrature incremental with or without commutation
- Pulse and direction
- SSI and EnDat

The module also provides a simulated encoder output that can be programmed to operate in the following modes:

- Quadrature incremental
- Pulse and direction
- SSI

The module also incorporates high speed inputs for position capture.

Functions		
P1 Position feedback interface	P2 Position feedback interface	Encoder simulation outputs
AB Servo FD Servo FR Servo SC Servo	None	None
AB FD FR	AB, FD, FR, EnDat, SSI	None
SC SC Hiperface	None	Full
SC EnDat SC SSI	AB, FD, FR (No Z marker pulse input)	None
	EnDat, SSI	
	None	No Z marker pulse output
EnDat SSI	AB, FD, FR	None
	EnDat, SSI	No Z marker pulse output
	None	Full

FEEDBACK

Position feedback device interface connections

The SI-Universal Encoder has two position feedback interfaces and an encoder simulation output on the 15-way D-type. The availability of the encoder simulation output and the 2nd position interface (P2) depends on the feedback device type selected for the 1st position interface (P1) as some feedback devices use all pins of the 15-way D-type.

The drive supports the following encoder types:

Position feedback device type	Drive name
Quadrature incremental encoders with or without marker pulse	AB
Frequency and direction incremental encoders with or without marker pulse	FD
Forward / reverse incremental encoders with or without marker pulse	FR
Quadrature incremental encoders with or without marker pulse and UVW commutation signals for absolute position for permanent magnet motors	AB Servo
Frequency and direction incremental encoders with or without marker pulse and UVW commutation signals for absolute position for permanent magnet motors	FD Servo
Forward / reverse incremental encoders with or without marker pulse and UVW commutation signals for absolute position for permanent magnet motors	FR Servo
Sincos incremental encoders with or without marker pulse	SC
Sick sincos encoders with Hiperface communications for absolute position	SC Hiperface
Heidenhain EnDat 2.1 or 2.2 communication only encoders	EnDat
Heidenhain sincos encoders with EnDat communication for absolute position	SC EnDat
SSI encoders (Gray code or binary)	SSI
Sincos encoders with SSI comms for absolute position (Gray code or binary)	SC SSI
Sincos incremental encoders with or without marker pulse and UVW commutation signals for absolute position for permanent magnet motors	SC Servo

The marker inputs can be used without their associated position feedback as freeze trigger inputs, therefore these are present where possible even if the associated incremental or SINCOS position feedback is not possible. The table below gives the connection functions associated with the codes used.

Connection Function	Connection Definition
Position Interface inputs	
A	A input for AB, or AB Servo encoders, F input for FD, FD Servo, FR or FR Servo encoders
B	B input for AB, or AB Servo encoders, D input for FD or FD Servo encoders, R input for FR or FR Servo encoders
Z	Z input for AB, AB Servo, FD, FD Servo, FR, FR Servo, SC encoders, Freeze input
U, V, W	Commutation signals for AB Servo, FD Servo, FR Servo, or SC Servo
Cos, Sin	Cosine and Sine inputs for SC, SC EnDat, SC Hiperface, SC SSI or SC Servo encoders
D	Data input/output for SC EnDat, SC Hiperface or EnDat encoders Data input for SC SSI, SSI encoders
Clk	Clock output for SC EnDat, SC SSI, EnDat or SSI encoders
Encoder Simulation Output	
AOut	A output for AB mode, F output for FD or FR modes, Data output for SSI Gray or SSI Binary modes
BOut	B output for AB mode, D output for FD or FR modes, Clock input for SSI Gray or SSI Binary modes
Zout	Z output for AB, FD or FR modes
Power Supply and Temperature Measurement	
PS1	Power supply output (13 = Supply, 14 = 0 V)
Th	Temperature measurement input

Terminal descriptions

The table below shows the functions that can be provided simultaneously, along with the connections required for each combination of functions.

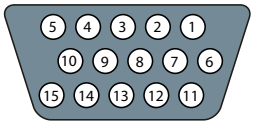

D-type connector

Functions			Connections							
P1 Position feedback interface	P2 Position feedback interface	Encoder Simulation Output	1/2	3/4	5/6	7/8	9/10	11/12	13/14	15
AB Servo FD Servo FR Servo			A1	B1	Z1	U1	V1	W1	PS1	Th
SC Servo			Cos1	Sin1	Z1	U1	V1	W1	PS1	Th
AB, FD, FR	AB, FD, FR		A1	B1	Z1	A2	B2	Z2	PS1	Th
AB, FD, FR	EnDat, SSI		A1	B1	Z1	D2	Clk2	Z2	PS1	Th
AB, FD, FR		Full	A1	B1	Z1	AOut	BOut	ZOut	PS1	Th
SC	AB, FD, FR		Cos1	Sin1	Z1	A2	B2	Z2	PS1	Th
SC	EnDat, SSI		Cos1	Sin1	Z1	D2	Clk2	Z2	PS1	Th
SC		Full	Cos1	Sin1	Z1	AOut	BOut	ZOut	PS1	Th
SC Hiperface	AB, FD, FR		Cos1	Sin1	D1	A2	B2	Z2	PS1	Th
SC Hiperface	EnDat, SSI		Cos1	Sin1	D1	D2	Clk2	Z2	PS1	Th
SC Hiperface		Full	Cos1	Sin1	D1	AOut	BOut	ZOut	PS1	Th
SC EnDat SC SSI	AB, FD, FR No Z		Cos1	Sin1	D1	A2	B2	ClK1	PS1	Th
SC EnDat SC SSI	EnDat, SSI		Cos1	Sin1	D1	D2	Clk2	Clk1	PS1	Th
SC EnDat SC SSI		No Z marker pulse	Cos1	Sin1	D1	AOut	BOut	Clk1	PS1	Th
EnDat, SSI	AB, FD, FR		D1	Clk1	Z1	A2	B2	Z2	PS1	Th
EnDat, SSI	EnDat, SSI		D1	Clk1	Z1	D2	Clk2	Z2	PS1	Th
EnDat, SSI		Full	D1	Clk1	Z1	AOut	BOut	ZOut	PS1	Th
EnDat, SSI	EnDat, SSI	No Z marker pulse	D1	Clk1	D2	AOut	BOut	Clk2	PS1	Th

Blue text indicates P1 interface connections | Green text indicates P2 interface connections | Red text indicates encoder simulation output connections | A1 means A = Pin1, A\ = Pin2

Screw terminal connector

Terminal	Description	
1	24 V Freeze input	
2	0 V	
3 (7)	Encoder simulation output: A, F or DATA	| P2 input: A, F, DATA
4 (8)	Encoder simulation output: A\, F\ or DATA\	| P2 input: A\, F\, DATA\
5 (9)	Encoder simulation output: B, F, D or Clock	| P2 input: B, F, D, Clock
6 (10)	Encoder simulation output: B\, F\, D\ or Clock\	| P2 input: B\, F\, D\, Clock\
7	0 V	
8 (11)	Encoder simulation output: Z	| P2 input: Z
9 (12)	Encoder simulation output: Z\	| P2 input: Z\
10 (13)	Power supply output	

1	2	3	4	5
6	7	8	9	10

The termination resistors are always enabled on the P2 position interface. Wire break detection is not available when using AB, FD or FR position feedback device types on the P2 position interface.

The value in brackets corresponds to the pin on the 15-way D-type to which this terminal is connected.

Additional I/O System Integration Modules

SI-I/O

M100	M200	M300	M400	M600	M700
	✓	✓	✓	✓	✓

Unidrive M's extended I/O interface module increases the number of I/O points on a drive. All connections from the option module to the drive are made via the drive connector. Connections from external equipment to the SI-I/O are made via a 3-way pluggable screw connector for the two relays and an 11-way pluggable screw connector for the digital and analog I/O.

Features include:

- 4 x Digital inputs/outputs
- 3 x Analog inputs (default) / Digital inputs
- 1 x Analog output (default)* / Digital input
- 2 x Relays

Digital I/O

By default, the SI-I/O Module is set up for four programmable digital inputs/outputs. By configuring the analog I/O as digital inputs, it is possible for the SI-I/O module to have four programmable inputs/outputs and also four digital inputs.

The functionality of these terminals is as follows:

- The logic sense selected can be positive (default) or negative
- The logic state of each input is monitored by a read-only parameter
- The logic state can be inverted
- The digital input can be programmed to any suitable destination bit parameter
- The digital output can be sourced from any suitable bit parameter
- The outputs can operate either as a push-pull or an open collector output

The SI-I/O has a maximum output current of 250 mA at 24 V across all four digital outputs.

Analog I/O

By default, the SI-I/O is set-up for three single-ended analog inputs and one analog output or one high resolution* differential analog input*, one single-ended analog input and one analog output.

Analog inputs 1 and 2 can only be configured as ±10 Vdc voltage inputs or digital inputs. When both are configured as analog voltage inputs, they can be used as a single high resolution differential analog input.

Analog input 3 can operate in voltage mode (±10 Vdc), current mode (0 to 20 mA) or as a digital input.

Analog output 1* can operate in voltage mode (±10 Vdc), current mode (0 to 20 mA) or as a digital input.

Relays

The two relays can be used to convey the logic state of any suitable parameter to external equipment. The logic state is processed as follows:

- A suitable source parameter is assigned to each relay
- The logic state can be inverted
- The state of the relay is monitored by a parameter

* Only supported by M600 and M700

Terminal descriptions

1	2	3	4	5	6	7	8	9	10	11

21	22	23

PL1	
Terminal	**Function**
1	0 V common
2	Digital input/output 1
3	Digital input/output 2
4	Digital input/output 3
5	Digital input/output 4
6	0 V common
7	Analog input 1/digital input 5
8	Analog input 2/digital input 6
9	Analog input 3/digital input 7
10	0 V common
11	Analog output 1/digital input 8

PL2	
Terminal	**Function**
21	Relay 1
22	Relay common
23	Relay 2

Keypads

Unidrive M's range of keypad options is hot-swappable and is designed to enhance ease of use. From easy commissioning to rapid diagnostics, enhanced usability is achieved by a range of keypad options including plain text LCD display, support of multiple languages and flexible mounting options.

Type		Benefit	M100	M200	M300	M400	M600	M700
Fixed LED keypad		Simple LED keypad fitted as standard for quick and easy commissioning and use.	•	•	•			
Fixed LED keypad with speed reference potentiometer		Simple LED keypad with user friendly speed reference potentiometer for convenient speed control.	M101	M201				
CI-Keypad		Intuitive plain text, multi-language LCD keypad for rapid set-up and superior diagnostics maximizes machine up-time.				•		
Remote keypad		All the features of the CI-Keypad LCD, but remote mountable. This allows flexible mounting on the outside of a panel and meets IP66 (NEMA 4).		•	•	•	•	•
KI-Keypad		Plain text, multi-language LCD keypad with up to four lines of text for in-depth parameter and data descriptions, for an enhanced user experience.					•	•
KI-Keypad RTC		All the features of the KI-Keypad, but with battery operated real-time clock. This allows accurate time stamping of events, aiding diagnostics.					•	•

Drive interface units

Back-up

AI-Back-up Adaptor

M100	M200	M300	M400	M600	M700
✓	✓	✓	✓		

Port adaptor that allows the drive to use an SD card for parameter cloning, and an input for 24 V back-up.

SD card

Unidrive M uses readily available SD cards for quick and easy parameter and program storage. SD cards provide a large memory capability allowing a complete system reload if required.

24 Vdc supply

The 24 Vdc supply connected to the +24 V supply terminals on the AI-Back-up Adaptor and Smart Adaptor provides the following functions:

- Back-up power supply to keep the control circuits of the drive powered-up when the line power supply is removed. Fieldbus modules and serial communications can continue to operate.
- Clone or load parameters when the line power supply is not available. The keypad can be used to set-up parameters.

AI-Smart Adaptor

M100	M200	M300	M400	M600	M700
✓	✓	✓	✓		

Contains built-in 4 GB memory for parameter cloning and applications programs, and an input for 24 V back-up

Smartcard

M100	M200	M300	M400	M600	M700
				✓	✓

The optional Smartcard memory device can be used to back-up parameter sets and PLC programs, as well as copying them from one drive to another, including from a Unidrive SP. It also allows:

- Simplified drive maintenance and commissioning
- Quick set-up for sequential build of machines
- Upgrades to be stored on a Smartcard and sent to the customer for installation

SD-Smartcard Adaptor

M100	M200	M300	M400	M600	M700
				✓	✓

Conversion device that allows an SD card to be inserted into the Smartcard slot, for parameter cloning and application programs.

Communications

AI-485 Adaptor

M100	M200	M300	M400	M600	M700
	✓	✓	✓		

Adaptor that allows the drive to communicate via RS485 using Modbus RTU can be used to connect remote keypad.

Terminal descriptions

PL2

PL2	
Terminal	**Function**
1	0V
2	RX\ TX\
3	RX TX
4	120 Ω termination resistor
5	TX Enable
6	+24 V (100 mA)

PL1

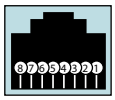

PL1	
Terminal	**Function**
1	120 Ω Termination resistor
2	RX TX
3	0V
4	+24 V (100 mA)
5	Not connected
6	TX enable
7	RX\ TX\
8	RX\ TX\ (if termination resistors are required, link to pin 1)

CI-485 Adaptor

M100	M200	M300	M400	M600	M700
			✓		

Port adaptor that allows the drive to communicate via RS485 on Modbus RTU. This can be used to connect the Remote keypad.

KI-485 Adaptor

M100	M200	M300	M400	M600	M700
				✓	✓

Allows the drive to communicate via RS485 on Modbus RTU. This is commonly used for programming if the drive has no keypad and is recommended for use with the Remote keypad.

CT USB Comms cable

The USB Comms cable allows the drive to connect to a PC for use with Unidrive M's PC tools

P.N. 0778-0084-05 01/16